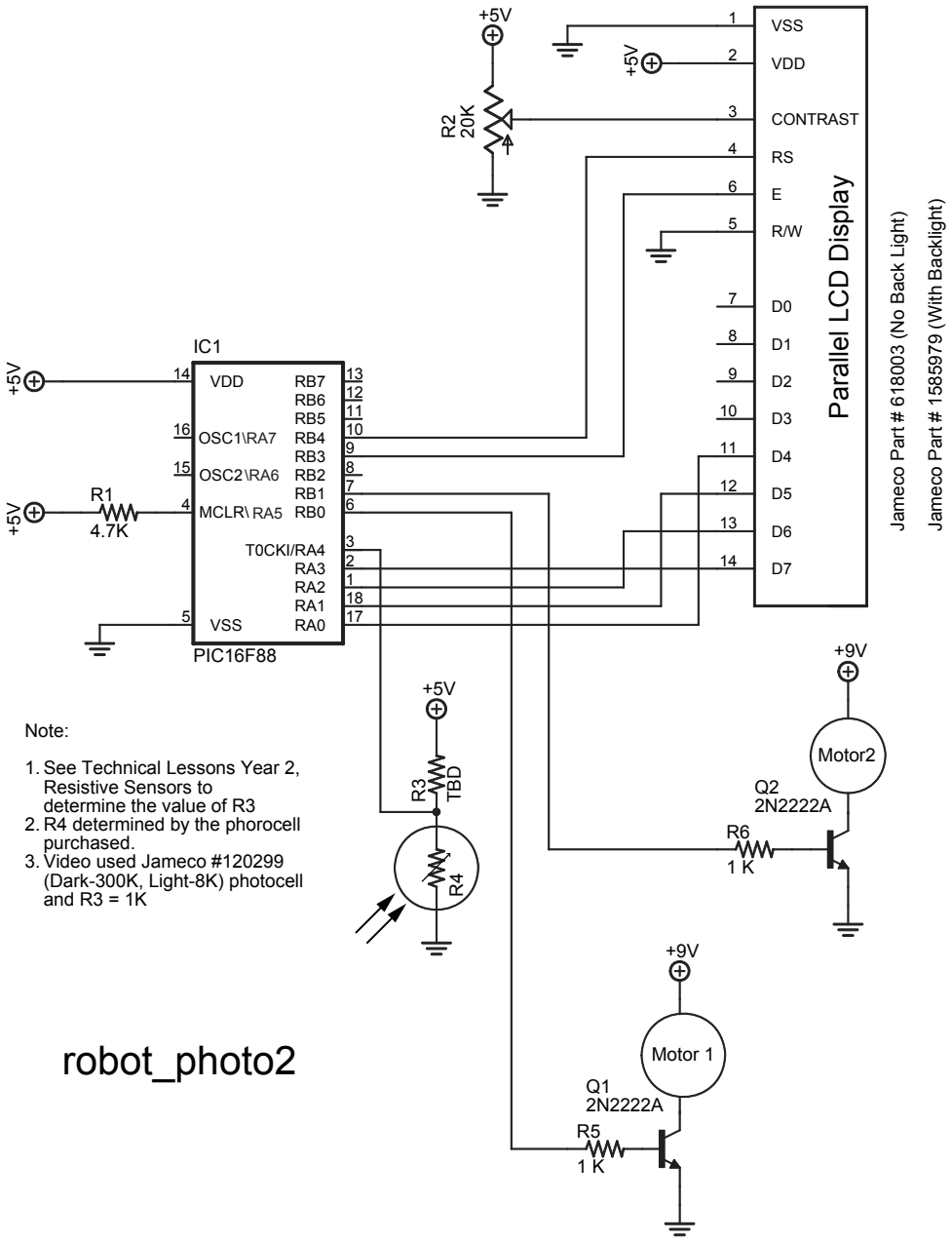

Note:

1. See Technical Lessons Year 2, Resistive Sensors to determine the value of R3
2. R4 determined by the phorocell purchased.
3. Video used Jameco #120299 (Dark-300K, Light-8K) photocell and R3 = 1K

robot_photo2