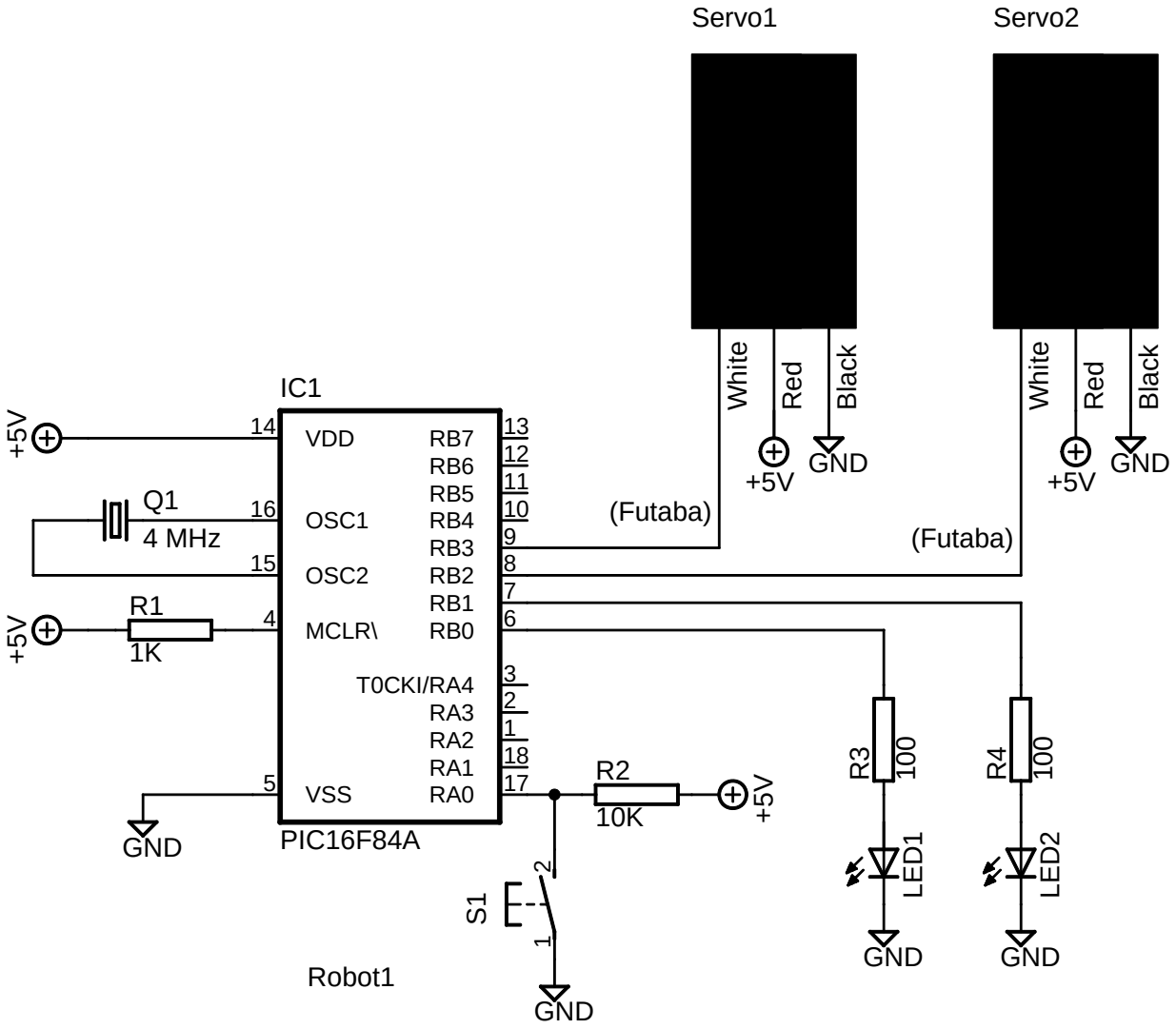
Servo1
Servo2
White
Red
Black
+5V
GND
(Futaba)
IC1
VDD
OSC1
OSC2
MCLR\
VSS
RB7
RB6
RB5
RB4
RB3
RB2
RB1
RB0
T0CKI/RA4
RA3
RA2
RA1
RA0
PIC16F84A
Q1
4 MHz
R1
1K
R2
10K
R3
100
R4
100
LED1
LED2
S1
Robot1