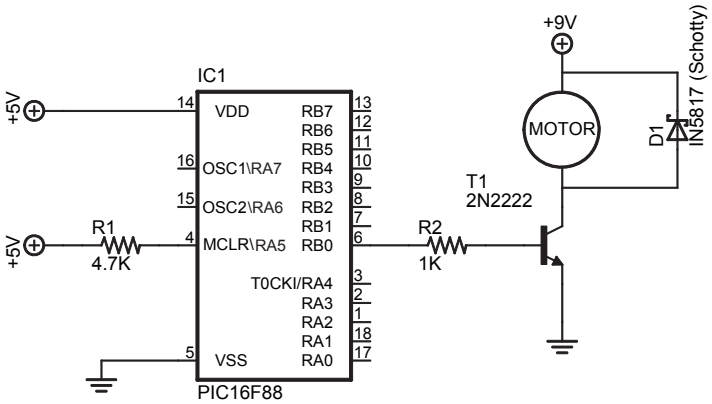
IC1
+5V
+5V
14
VDD
16
OSC1\RA7
15
OSC2\RA6
4
MCLR\RA5
5
VSS
RB7
RB6
RB5
RB4
RB3
RB2
RB1
RB0
T0CKI/RA4
RA3
RA2
RA1
RA0
13
12
11
10
9
8
7
6
3
2
1
18
17
PIC16F88
R1
4.7K
R2
1K
T1
2N2222
+9V
MOTOR
D1
IN5817 (Schotty)