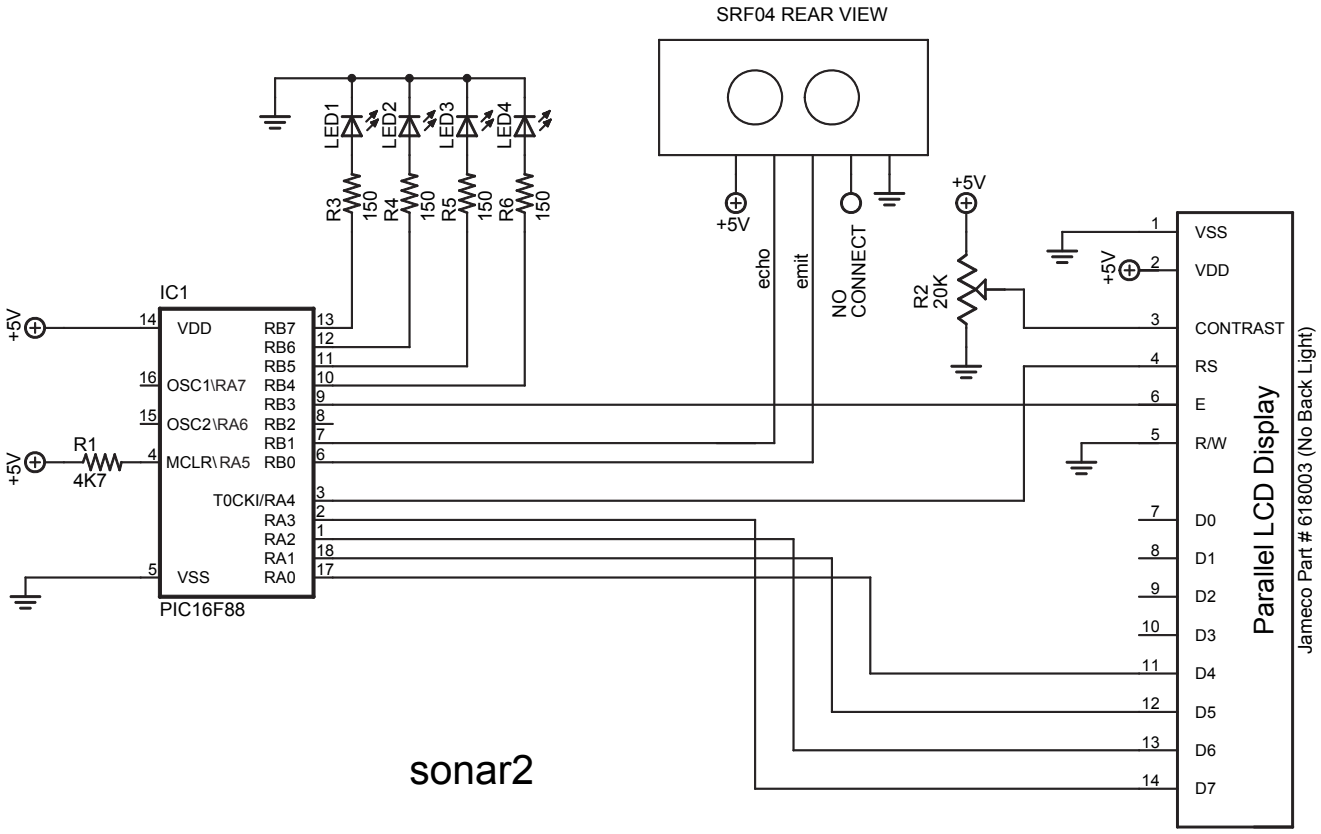
SRF04 REAR VIEW
LED1
LED2
LED3
LED4
R3 150
R4 150
R5 150
R6 150
+5V
echo
emit
NO CONNECT
R2 20K
IC1
VDD
OSC1\RA7
OSC2\RA6
MCLR\RA5
VSS
RB7
RB6
RB5
RB4
RB3
RB2
RB1
RB0
T0CKI/RA4
RA3
RA2
RA1
RA0
PIC16F88
R1 4K7
VSS
VDD
CONTRAST
RS
E
R/W
D0
D1
D2
D3
D4
D5
D6
D7
Parallel LCD Display
Jameco Part # 618003 (No Back Light)

sonar2