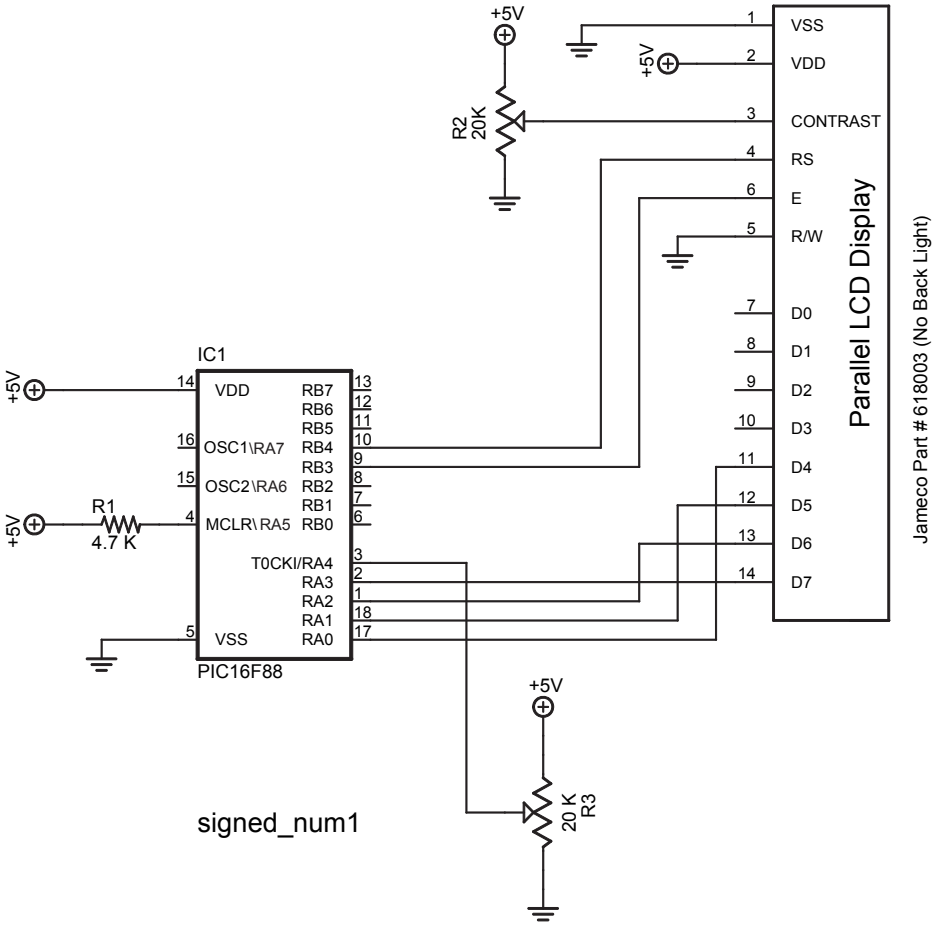
+5V
R2
20K
+5V
1
VSS
2
VDD
3
CONTRAST
4
RS
6
E
5
R/W
7
D0
8
D1
9
D2
10
D3
11
D4
12
D5
13
D6
14
D7
Parallel LCD Display
Jameco Part # 618003 (No Back Light)
IC1
+5V
14
VDD
RB7
13
RB6
12
RB5
11
16
OSC1\RA7
RB4
10
RB3
9
15
OSC2\RA6
RB2
8
RB1
7
+5V
R1
4.7 K
4
MCLR\ RA5
RB0
6
T0CKI/RA4
3
RA3
2
RA2
1
RA1
18
5
VSS
RA0
17
PIC16F88
+5V
20 K
R3
signed_num1