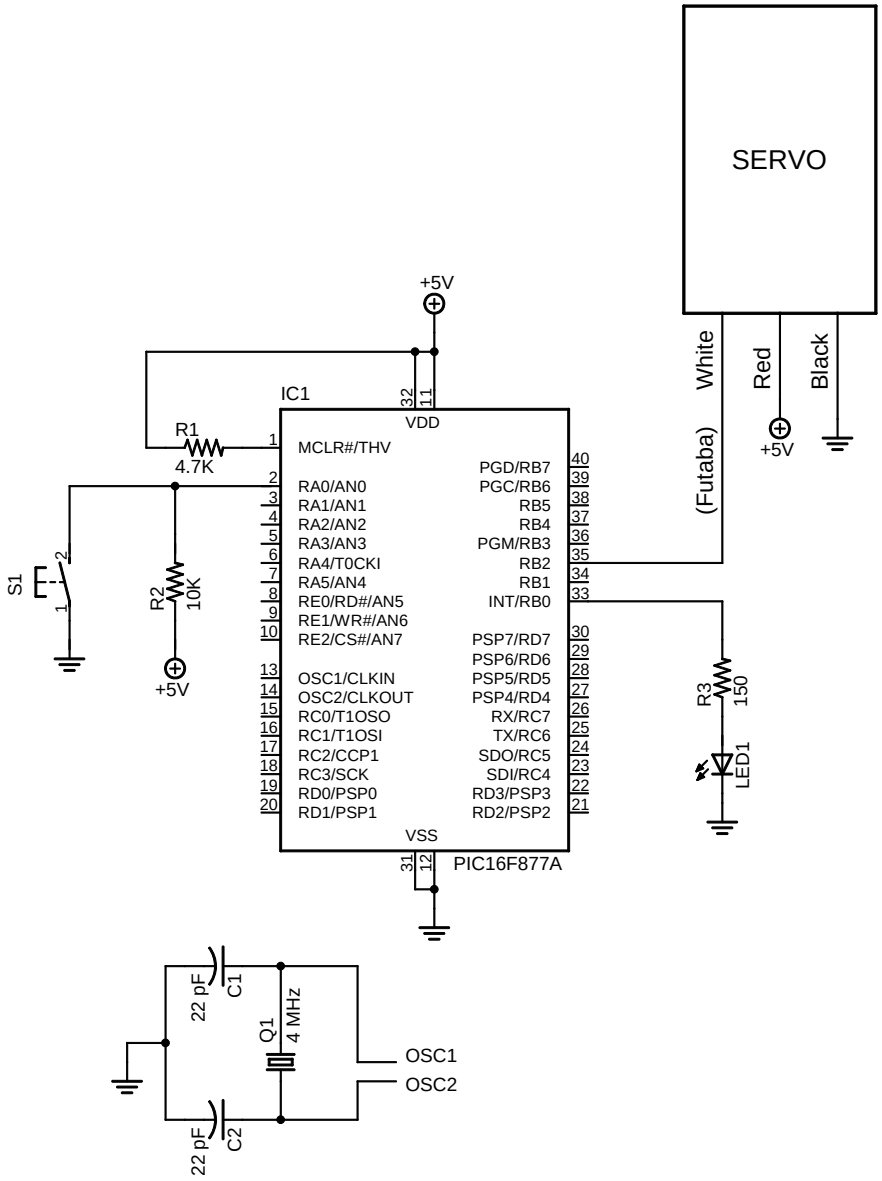
SERVO
White
Red
Black
(Futaba)
+5V
+5V
IC1
VDD
VSS
PIC16F877A
MCLR#/THV
RA0/AN0
RA1/AN1
RA2/AN2
RA3/AN3
RA4/T0CKI
RA5/AN4
RE0/RD#/AN5
RE1/WR#/AN6
RE2/CS#/AN7
OSC1/CLKIN
OSC2/CLKOUT
RC0/T1OSO
RC1/T1OSI
RC2/CCP1
RC3/SCK
RD0/PSP0
RD1/PSP1
PGD/RB7
PGC/RB6
RB5
RB4
PGM/RB3
RB2
RB1
INT/RB0
PSP7/RD7
PSP6/RD6
PSP5/RD5
PSP4/RD4
RX/RC7
TX/RC6
SDO/RC5
SDI/RC4
RD3/PSP3
RD2/PSP2
R1
4.7K
S1
R2
10K
+5V
R3
150
LED1
C1
22 pF
Q1
4 MHz
C2
22 pF
OSC1
OSC2