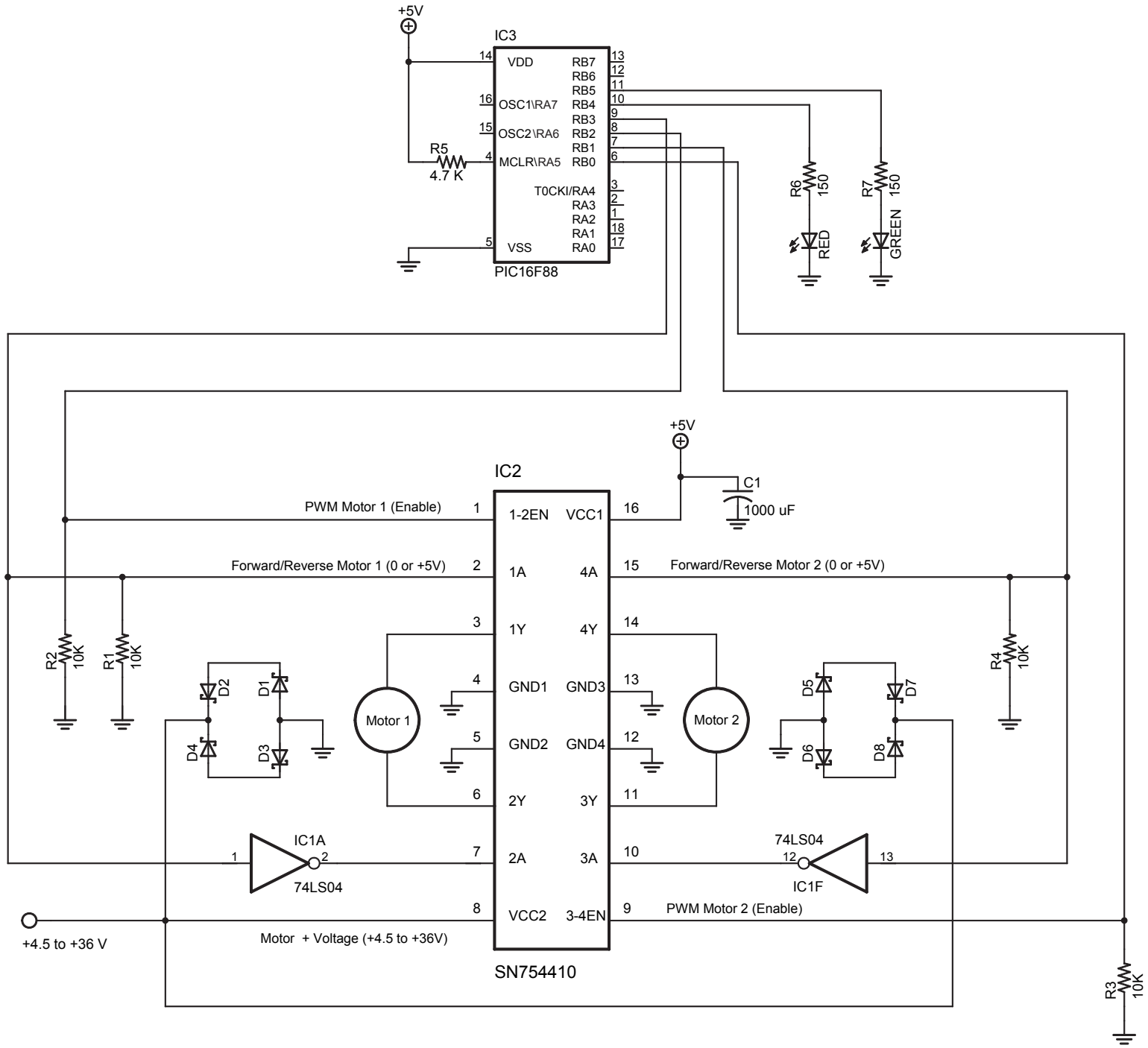

NOTES:

1. D1 - D8 1N5817
2. 74LS04 Pin 7 GND
   74LS04 Pin 14 Vcc +5V
3. SN754410 GNDS Also Act As
   Heatsinks, Ground Separately

Texas Instrument SN754410 H-Bridge Motor Driver